RAIFIL

MODEL:F-04-2BC-L

Description: The faucet is made of brass casting, grinding and polishing the surface after molding chrome plating,its scope of application: home kitchens, laboratories, centralized water supply points.

一.Constitution:

(1)Parts: 1)Faucet*1; 2)Plate*1; 3)RubberWasher*2;

4)PiasticWasher*1; 5)StarWasher*1; 6)Locking Nut*1

7) 1/4″ in-line Thread*1 8)3/8″connector*1; 9) Lock Nut*1;

二. Technical Parameters And Related Matters:

(1)Technical parameters:

Material	Weight (kg)	Type	Description	L(mm)	Norm. Pressure kg/cm2	Inlet Tube	Outlet Tube
Faucet	Faucet						
Cu	0.38	Upper leaking handle goose neck faucet	White	75	2--3	1/4″	2/5″

(2)Installation diagram: (see photo)

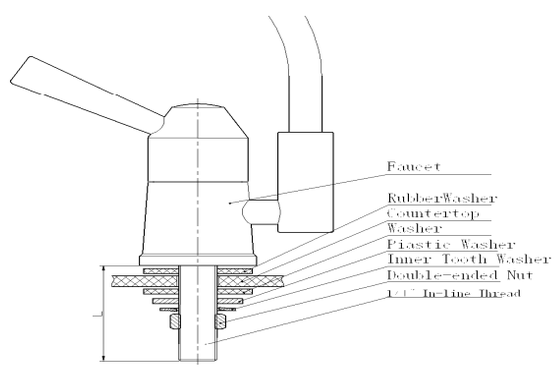

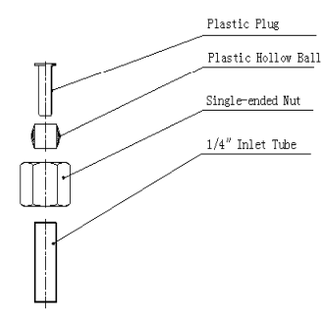

(3)Parts Size:

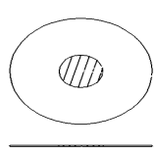

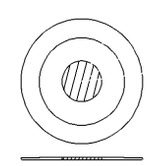

1)Plate:

Name	Material	L1(mm)	R1(mm)	R2(mm)
Plate	PVC	450	225	70

2)PiasticWasher

Name	Material	R1(mm)	R2(mm)	R3(mm)
PiasticWasher	PVC	215	151	70

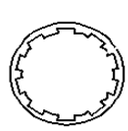

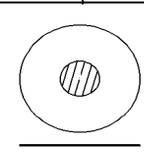

3)StarWasher:

Name	Material	R(mm)
StarWasher	CS	100

4)RubberWasher:

Name	Material	L1(mm)	R1(mm)	R2(mm)
RubberWasher	NBR	430	215	70

(4)Packing:

Quantity of each package	N.W(Kg)	G.W(Kg)	L(mm)	W(mm)	H(mm)
50	19	22	54	35	41

Warning: Do not place in direct sunlight component.